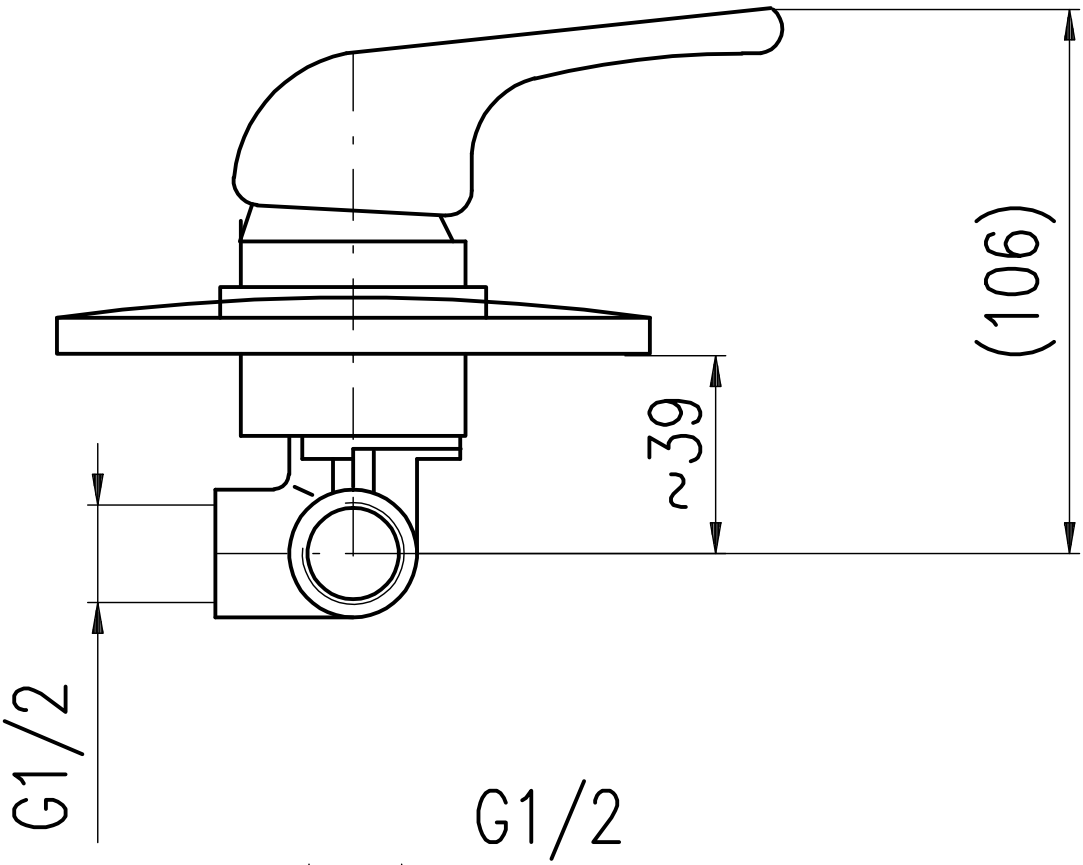
(106)
~39
G1/2

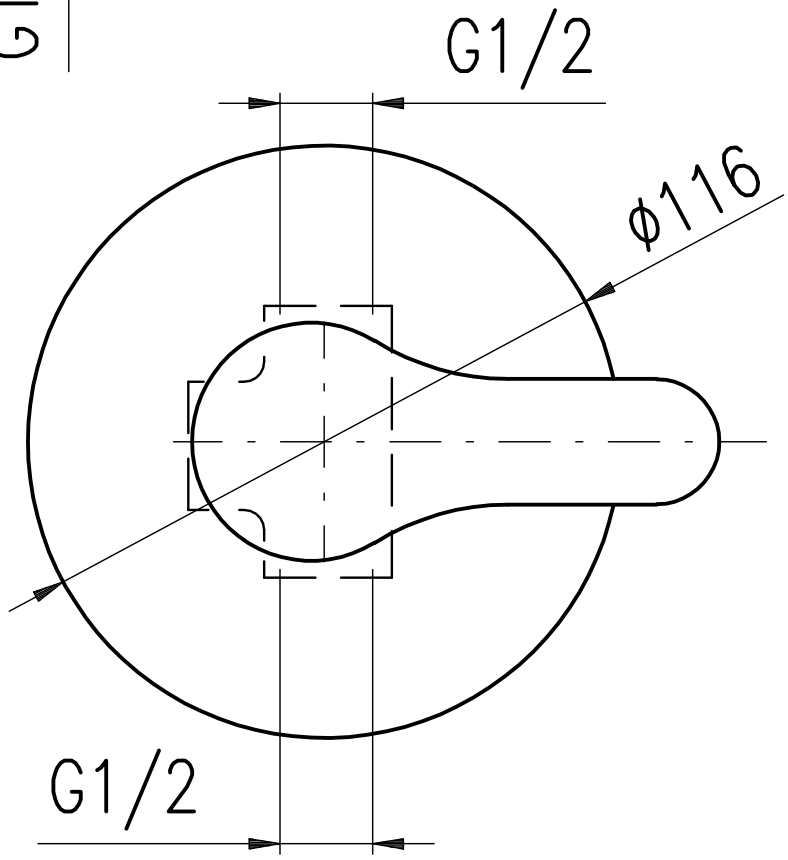
G1/2
ϕ116
G1/2