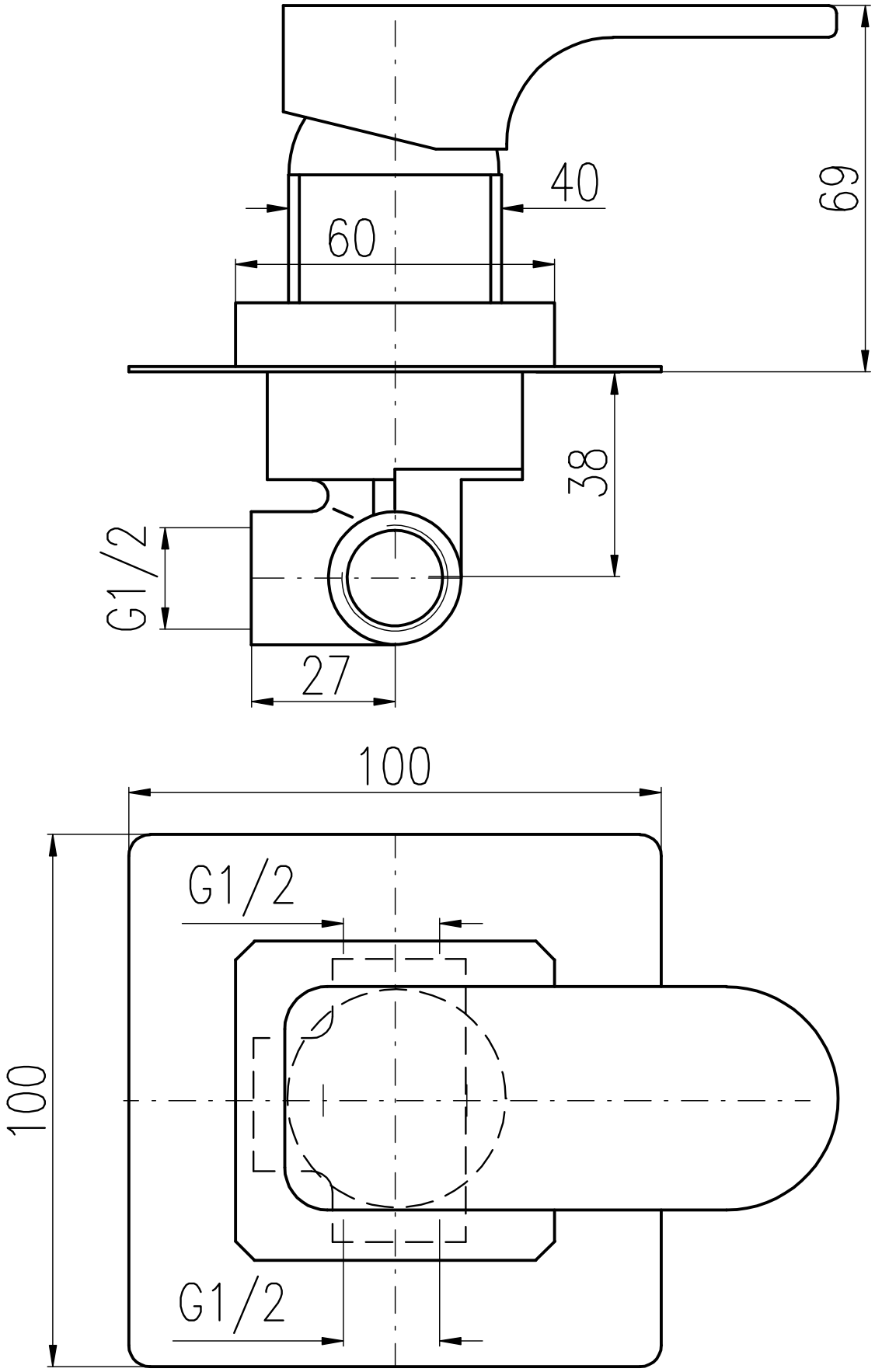
40
69
60
38
G1/2
27
100
G1/2
100
G1/2