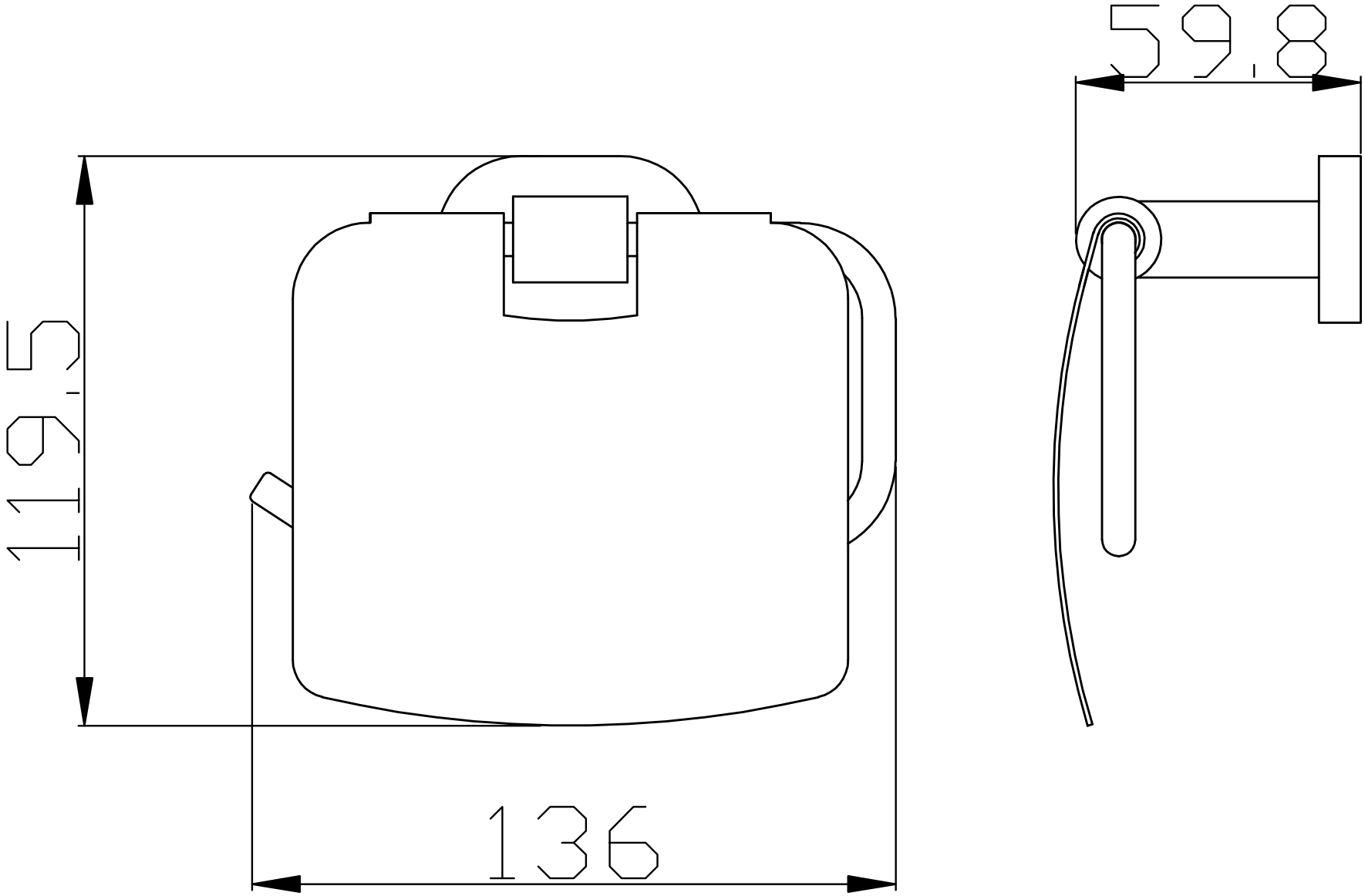
119.5
136
59.8